G100 Swivel Load Ring

Grade 100 swivelling lifting point - thread sizes M8 to M36 - 0.3 to 8 tonne W.L.L.



0.3 - 8 tonne	Working load limit (W.L.L.) 11 sizes - see page 2
M8 - M36	Metric thread sizes
4 : 1	Safety factor In all loading directions

OVERVIEW

A high-performance Grade 100 lifting point for industrial lifting and securing. The ring swivels and pivots so it lines up with the direction of pull, and it keeps its safety coefficient in every loading direction - so it can be used for straight lifts, angled multi-leg lifts or fastening at 90°.

FEATURES & BENEFITS

- **Swivels and pivots** for loading in any direction
- **Safety coefficient in all directions** - including dynamic and angular loading
- **Ideal for lifting or fastening at 90°**
- **11 thread sizes** from M8 to M36
- **High strength steel** - Grade 100
- **Certified** to EN 1677 - supplied fully tested

TYPICAL APPLICATIONS

Manufacturing and fabrication · heavy machinery assembly and maintenance · transport and logistics · ship-building and marine lifting · construction and steel erection

DIMENSIONS

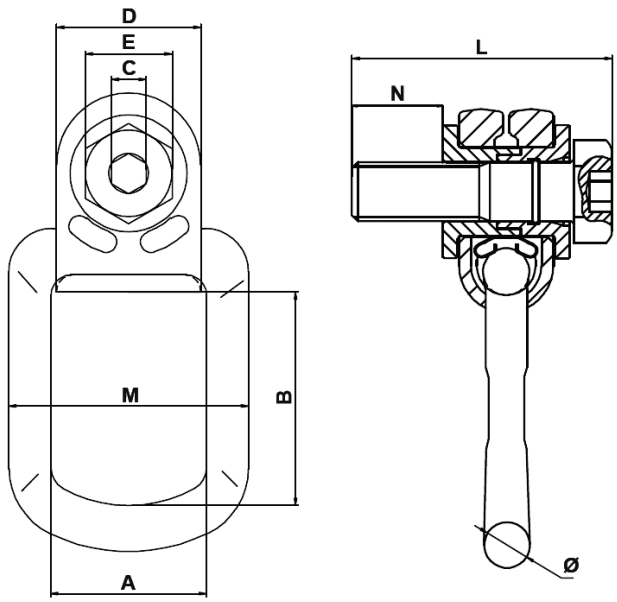

Dimension letters refer to the table on page 2. Dimensions in mm.

Important: Never exceed the W.L.L. for the method of lifting - see the loading chart on page 2. Fit into a suitable tapped hole and tighten to the torque setting shown, then check the ring swivels and pivots freely. Do not use where exposed to strong acids, alkalis or other corrosive chemicals. Inspect before each use.

LIFTIN GEAR

G100 Swivel Load Ring - Dimensions & Loading

Sizes, dimensions and W.L.L. by method of lifting

SIZES & DIMENSIONS

Product code	Thread	W.L.L. (tonne)	Breaking load (tonne)	A	B	C	D	E	M	L	N	Ø	Weight (kg)
G10-SWIV-RING-M8	M8	0.30	1.20	35	50.5	6	30	13	45	46	10.4	14	0.30
G10-SWIV-RING-M10	M10	0.63	2.52	35	50.5	6	30	17	45	52	15.4	14	0.38
G10-SWIV-RING-M12	M12	1.00	4.00	40	48	8	36	19	68	62	18	18	0.86
G10-SWIV-RING-M14	M14	1.20	4.80	40	48	8	36	19	68	66	21	18	0.89
G10-SWIV-RING-M16	M16	1.50	6.00	40	48	8	36	19	68	70	24	18	0.90
G10-SWIV-RING-M18	M18	2.00	8.00	54	74	12	50	30	83	83	26	16	1.75
G10-SWIV-RING-M20	M20	2.50	10.00	54	74	12	50	30	83	88	30	16	1.85
G10-SWIV-RING-M24	M24	4.00	16.00	54	88	14	50	36	83	95	37	18	1.95
G10-SWIV-RING-M27	M27	4.00	16.00	73	106	17	68	41	120	120	38	27	4.40
G10-SWIV-RING-M30	M30	5.00	20.00	73	106	17	68	41	120	132	48	27	4.40
G10-SWIV-RING-M36	M36	8.00	32.00	73	106	17	68	41	120	142	54	27	7.50

All dimensions in mm. Breaking load is four times the W.L.L.

LOADING CHART - W.L.L. (TONNE) BY METHOD OF LIFTING



Product code	Thread	0° 1 leg	0° 2 leg	90° 1 leg	90° 2 leg	0-45° 2 leg	45-60° 2 leg	Asymm. 2 leg	0-45° 3-4 leg	45-60° 3-4 leg	Asymm. 3-4 leg	Torque (Nm)
G10-SWIV-RING-M8	M8	0.30	0.60	0.30	0.60	0.42	0.30	0.30	0.63	0.45	0.30	30
G10-SWIV-RING-M10	M10	0.63	1.26	0.63	1.26	0.88	0.63	0.63	1.32	0.95	0.63	60
G10-SWIV-RING-M12	M12	1.00	2.00	1.00	2.00	1.40	1.00	1.00	2.10	1.50	1.00	100
G10-SWIV-RING-M14	M14	1.20	2.40	1.20	2.40	1.68	1.20	1.20	2.52	1.80	1.20	120
G10-SWIV-RING-M16	M16	1.50	3.00	1.50	3.00	2.10	1.50	1.50	3.15	2.25	1.50	150
G10-SWIV-RING-M18	M18	2.00	4.00	2.00	4.00	2.80	2.00	2.00	4.20	3.00	2.00	200
G10-SWIV-RING-M20	M20	2.50	5.00	2.50	5.00	3.50	2.50	2.50	5.25	3.75	2.50	250
G10-SWIV-RING-M24	M24	4.00	8.00	4.00	8.00	5.60	4.00	4.00	8.40	6.00	4.00	400
G10-SWIV-RING-M27	M27	4.00	8.00	4.00	8.00	5.60	4.00	4.00	8.40	6.00	4.00	400
G10-SWIV-RING-M30	M30	5.00	10.00	5.00	10.00	7.00	5.00	5.00	10.50	7.50	5.00	500
G10-SWIV-RING-M36	M36	8.00	16.00	8.00	16.00	11.20	8.00	8.00	16.80	12.00	8.00	700

Asymm. = asymmetric load. Torque setting is the tightening torque for fitting the ring.

Important: Always use the W.L.L. for the actual method of lifting from the chart above - for angled and multi-leg lifts the W.L.L. is lower than the straight lift. Tighten with a torque wrench to the setting shown. Never lift loads over people, and withdraw from service if the ring is damaged or does not swivel freely.